PRELIMINARY - NOT FOR CONSTRUCTION

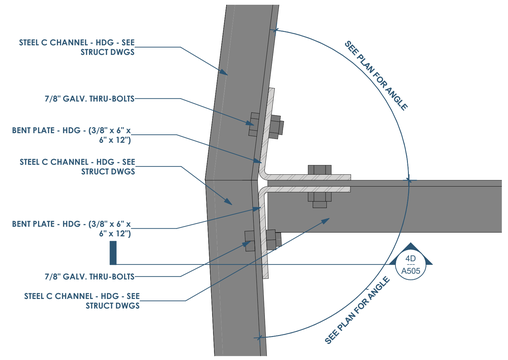

4D A505 DETAIL- ROOF - C CHANNEL PLAN
3" = 1'-0"

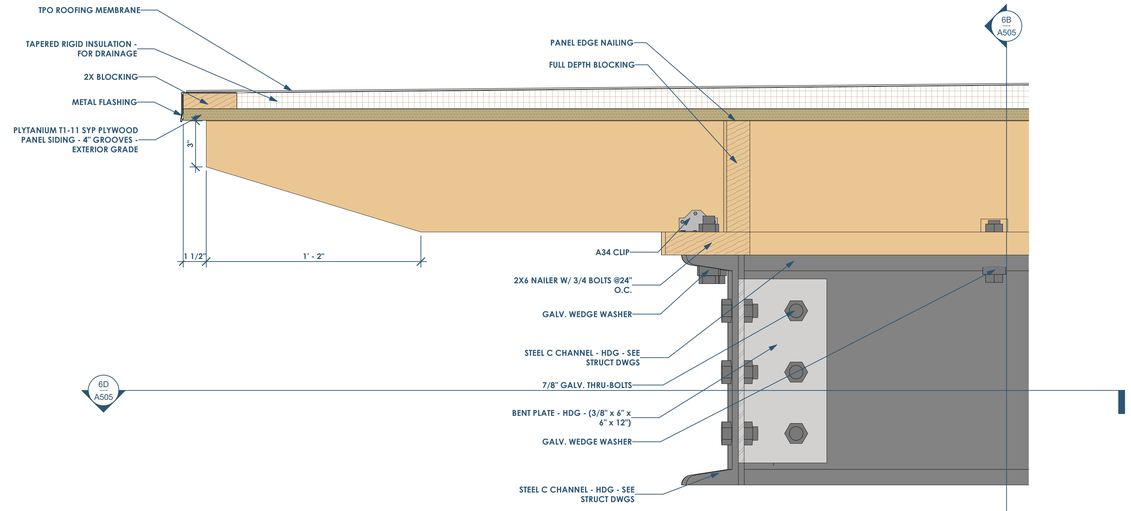

4D A505 DETAIL- ROOF - C CHANNEL SECTION 2
3" = 1'-0"

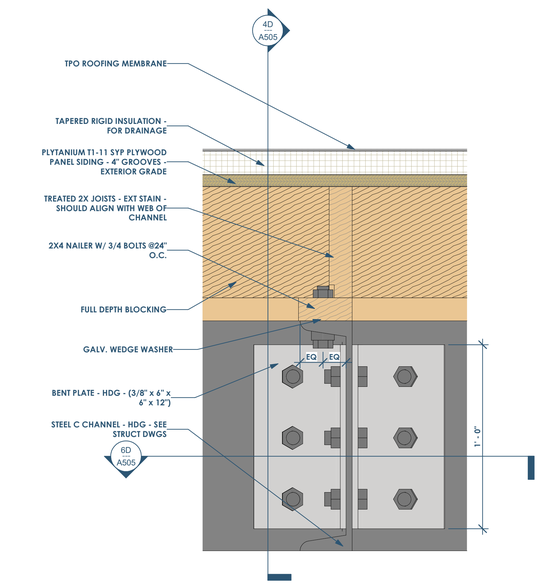

6B A505 DETAIL- ROOF - C CHANNEL SECTION 1
3" = 1'-0"

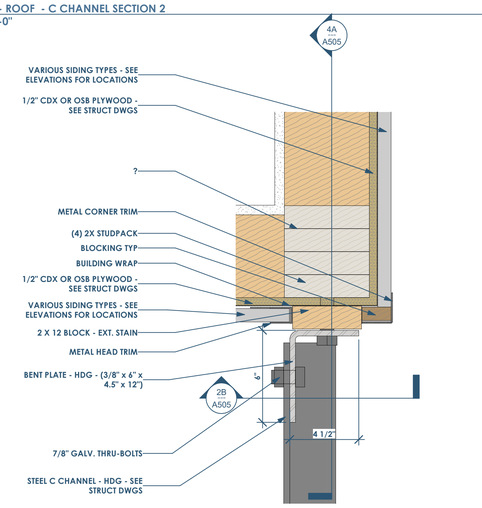

4B A505 DETAIL- ROOF 2 - C CHANNEL PLAN
3" = 1'-0"

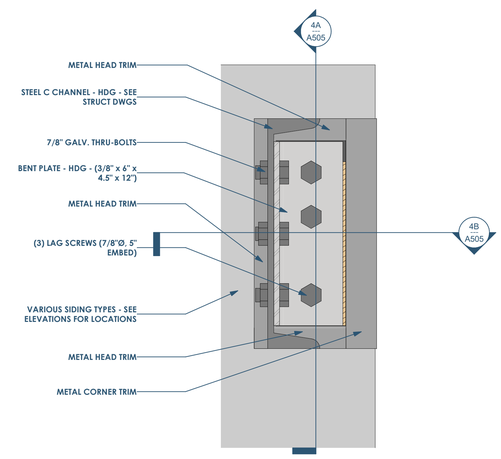

2B A505 DETAIL - ROOF 2 - C CHANNEL - SECTION 2
3" = 1'-0"

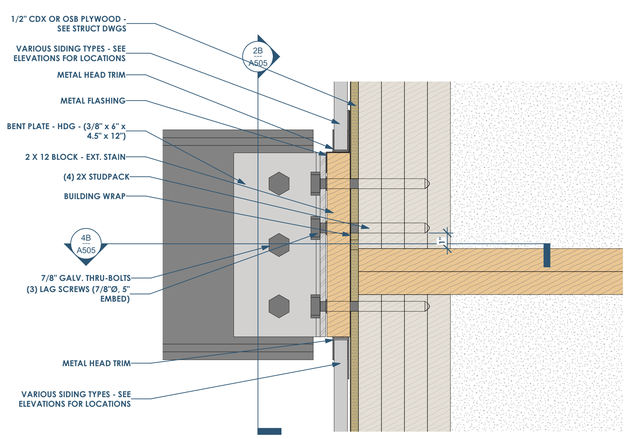

4A A505 DETAIL - ROOF 2 - C CHANNEL - SECTION 1
3" = 1'-0"

Owner: Renovation Wranglers
102 E 26th St
Bryan, TX 77803
Katieneason@me.com | 979.450.9969

Architect of Record: LKB Architecture
2929 Allen Pkwy Suite 200
Houston, TX 77019
lisa@lkbarchitecture.com | 713.425.3076

Structural: Dudley
6102 Imperial Loop Drive
College Station, TX 77845
(979) 777-0720

MEP: AMC Engineers
508 E Jackson St # 552
Burnet, TX 78611
info@amcengineers.com

Architect: OpeningDesign
17 S Fairchild | FL 7
Madison, WI 53703
ryan@openingdesign.com | 773.425.6456

This project, like most OpeningDesign's projects, is open source. (Attribution-ShareAlike 4.0 International--CC BY-SA 4.0)--freely available to any party for future use, assuming the terms such as Attribution and ShareAlike are honored.

Date	Description
05.19.2022	Progress Set

LARGE SCALE DETAILS

NAME OF PROJECT - **ADDRESS OF PROJECT**

A505